Jul. 2026

Datasheet of LTCC Device

RoHS & Halogen Free & REACH Compliance

Laminated Ceramic Fliter

400-470 MHz

P/N: FLT21B0404D-2139A

*Contents in this sheet are subject to change without prior notice.

LTCC Fliter 2012 (BS 0805) Size,

For 400-470 MHz Working Frequency

1. Features

High Attenuation & Low Insertion Loss.

2. Applications

Band Pass Filter for working frequency 400-470 MHz.

3. Shapes & Dimensions

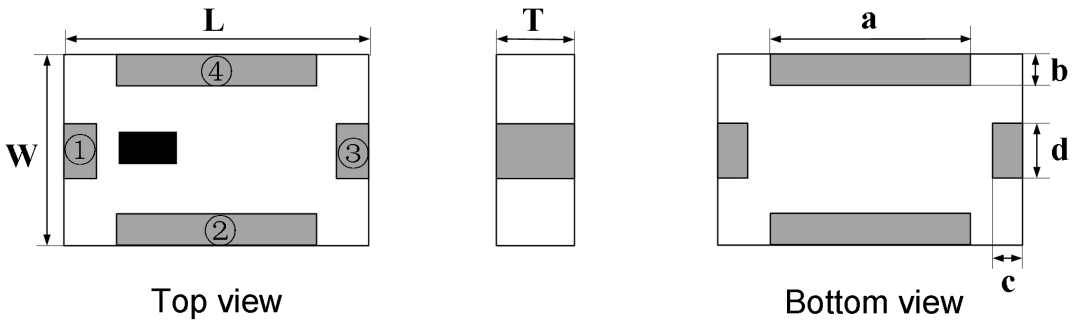

Top view

Bottom view



Side view

Mark	L	W	T	a	b	c	d
Dimensions (mm)	2.0±0.1	1.25±0.1	0.9±0.1	1.3±0.1	0.2±0.1	0.2±0.1	0.35±0.1

4. Terminal Pin Definition

①	**IN**	②	**GND**
③	**OUT**	④	**GND**

5. Electrical Characteristics

FLT21B0404D-2139A	Specification
Frequency range	400-470 MHz
Insertion Loss (@+25℃)	4.20 dB max. (3.90 dB typ.)
Insertion Loss (@-40~+85℃)	4.50 dB max.
Attenuation	35 dB min. (43 dB typ.) @ 100 MHz 30 dB min. (37 dB typ.) @ 200 MHz 30 dB min. (35 dB typ.) @ 250 MHz 30 dB min. (37 dB typ.) @ 300 MHz 20 dB min. (29 dB typ.) @ 350 MHz 14 dB min. (17 dB typ.) @ 520 MHz 25 dB min. (31 dB typ.) @ 570 MHz 30 dB min. (38 dB typ.) @ 620 MHz 40 dB min. (48 dB typ.) @ 670 MHz 40 dB min. (51 dB typ.) @ 770 MHz 40 dB min. (47 dB typ.) @ 880 MHz
Return Loss	12 dB min. (24 dB typ.)
Impedance	50 Ω
Power Capacity	3W max.
MSL	LEVEL 1
HBM ESD	Pass 1KV on all pins (Base on AEC-Q200-002)

Operating and Storage Condition	Storage Condition before Soldering
Operation Temperature Range: -40 ~ +85℃ Storage Temperature Range: -40 ~ +85℃	Storage Temperature Range: +10 ~ +30℃ Humidity: 30 to 70% relative humidity

6. Typical Electrical Performance at T= 25±5°C

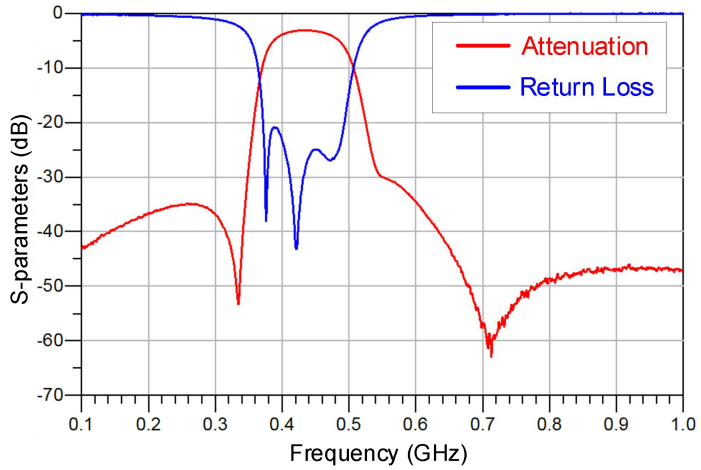

7. Soldering Land Pattern

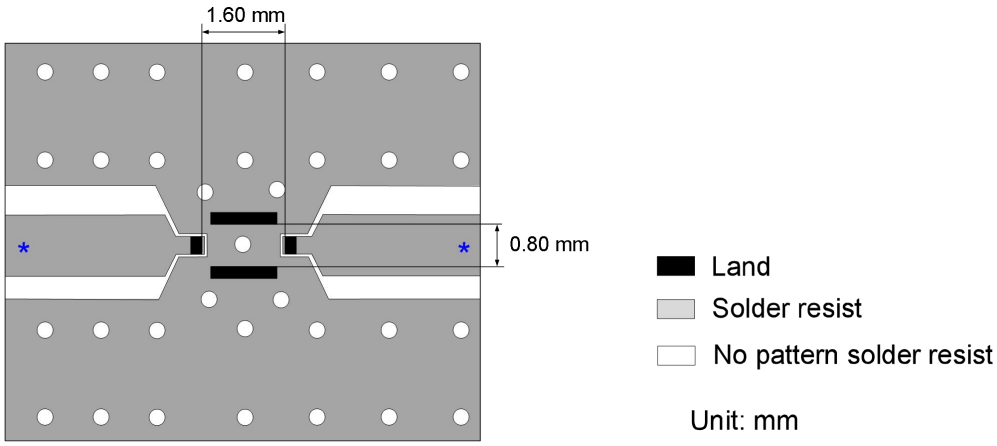

* Line width should be designed to match 50Ω characteristic impedance, depending on PCB material and thickness.

8. Reflow Soldering Standard Condition (For SnAgCu series solder paste)

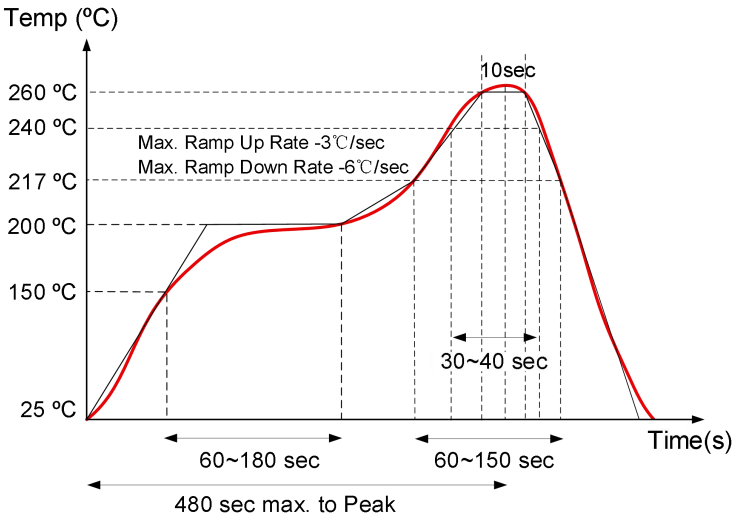

9. Packaging and Dimensions 2012 (BS 0805)

◆ **Plastic Tape**

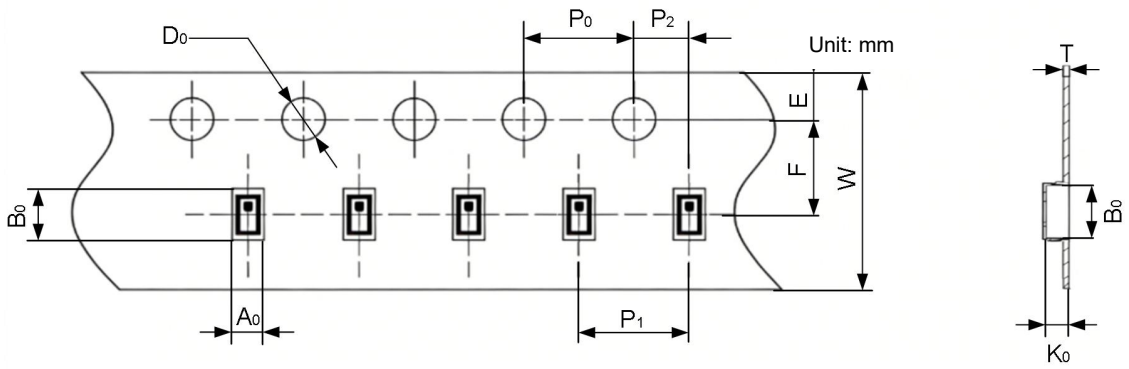

A_0	B_0	W	F	E	P_0	P_1	P_2	D_0	K_0	T	10 P_0
1.50 ±0.10	2.20 ±0.10	8.00 ±0.10	3.50 ±0.05	1.75 ±0.10	4.00 ±0.10	4.00 ±0.10	2.00 ±0.05	1.50 +0.10	1.00 ±0.05	0.25 ±0.02	40.00 ±0.20

◆ **Ordering Code**

F	LT	21	B	0404	D	2139A
FTR device	LTCC Technology	Size: 2012	BPF	Working Frequency: 400-470 MHz	Terminal electrode	Design code

◆ **Remarks for Package**

Reserve a length of ⩾150mm for the trailer of the carrier and ⩾150mm for the leader of the carrier and further ⩾150mm of cover tape at the leading part of the carrier.

◆ **Reel (3000 pcs/Reel)**

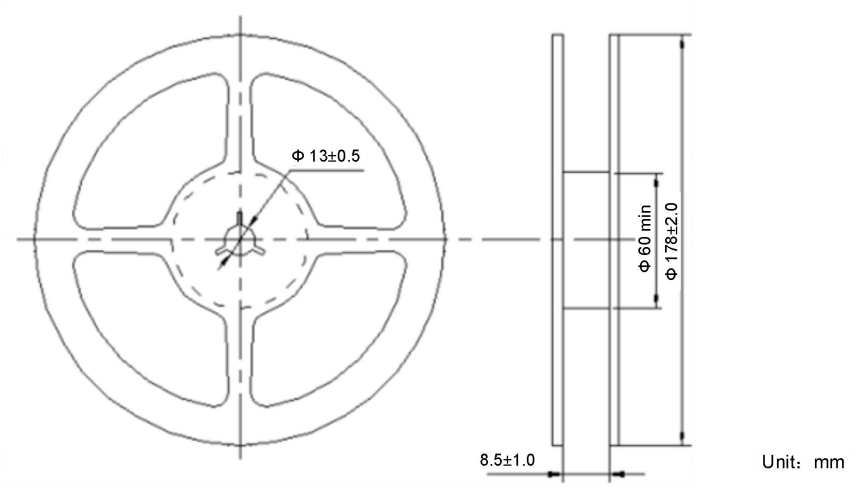

◆ **Storage Period**

Product should be used within 12 months from the day of FTR outgoing inspection.

Storage Temperature Range : +10~+30 degree C, Humidity : 30~70% RH.

10. Reliability Test

Test item	Test condition / Test method	Specification
Solderability IEC 60068-2-58 GB/T2423.28	*Solder bath temperature：240±5℃ *Immersion time：2±0.5 sec Solder：Sn96.5 Ag3.0 Cu0.5 for lead-free.	At least 95% of a surface of each terminal electrode must be covered by fresh solder.
Leaching (Resistance to dissolution of metallization) JIS C5101	*Solder bath temperature：260±5℃ *Leaching immersion time：10±1 sec Solder : Sn96.5 Ag3.0 Cu0.5 for lead-free.	Loss of metallization on the edges of each electrode shall not exceed 25%.
Resistance to soldering heat IEC 60068-2-58 GB/T2423.28	*Preheating temperature：120~150℃, 1 minute. *Solder temperature：260±5℃ *Immersion time：10±1 sec Solder：Sn96.5 Ag3.0 Cu0.5 for lead-free Measurement to be made after keeping at room temperature for 24±2 hrs.	No mechanical damage. Electrical specification shall satisfy the descriptions in electrical characteristics at the room temperature. Loss of metallization on the edges of each electrode shall not exceed 25%.
Drop Test IEC 60068-2-32 GB/T2423.8 Customer's specification.	*Height：50 cm *Test Surface: Rigid surface of concrete or steel. *Times：6 surfaces for each units；2 times for each side.	No mechanical damage. Electrical specification shall satisfy the descriptions in electrical characteristics at the room temperature.
Vibration IEC 60068-2-6 GB/T 2423.10	*Frequency：10Hz~55Hz~10Hz(1min) *Total amplitude：1.5mm *Test times：6hrs.(Two hrs each in three mutually perpendicular directions)	No mechanical damage. Electrical specification shall satisfy the descriptions in electrical characteristics at the room temperature.
Adhesive Strength of Termination IEC60068-2-21 GB/T 2423.60	*Pressurizing force： LGA terminal series : 2N(0605)；3N(1005)； 5N(≥1608) DIP terminal series : 3N(1005)； 5N(1608); 10N(≥2012) *Test time:10±1 sec	No remarkable damage or removal of the termination.

Bending test IEC 60068-2-21 GB/T 2423.60	The middle part of substrate shall be pressurized by means of the pressurizing rod at a rate of about 1 mm/s per second until the deflection becomes 2mm and then pressure shall be maintained for 10±1 sec. Measurement to be made after keeping at room temperature for 24±2 hours.	No mechanical damage. Electrical specification shall satisfy the descriptions in electrical characteristics at the room temperature.
Temperature cycle IEC60068-2-14 GB/T 2423.22	30 minutes at-40℃±2℃. 10~15 minutes at room temperature. 30minutes at +85℃±2℃. 10~15 minutes at room temperature. Total 100 continuous cycles Measurement to be made after keeping at room temperature for 24±2 hrs.	No mechanical damage. Electrical specification shall satisfy the descriptions in electrical characteristics at the room temperature.
High temperature IEC 60068-2-2 GB/T2423.2	*Temperature：85±2℃. *Test duration：500+24/-0 hours. Measurement to be made after keeping at room temperature for 24±2 hrs.	No mechanical damage. Electrical specification shall satisfy the descriptions in electrical characteristics.
Humidity (steady conditions) IEC60068-2-3 GB/T 2423.3	*Humidity：85±5%R.H. *Temperature：85±2℃. *Time：500+24/-0 hrs. Measurement to be made after keeping at room temperature for 24±2 hrs.	No mechanical damage. Electrical specification shall satisfy the descriptions in electrical characteristics at the room temperature.
Low temperature IEC 60068-2-1 GB/T2423.1	*Temperature：-40±2℃. *Test duration：500+24/-0 hours Measurement to be made after keeping at room temperature for 24±2 hrs.	No mechanical damage. Electrical specification shall satisfy the descriptions in electrical characteristics at the room temperature.